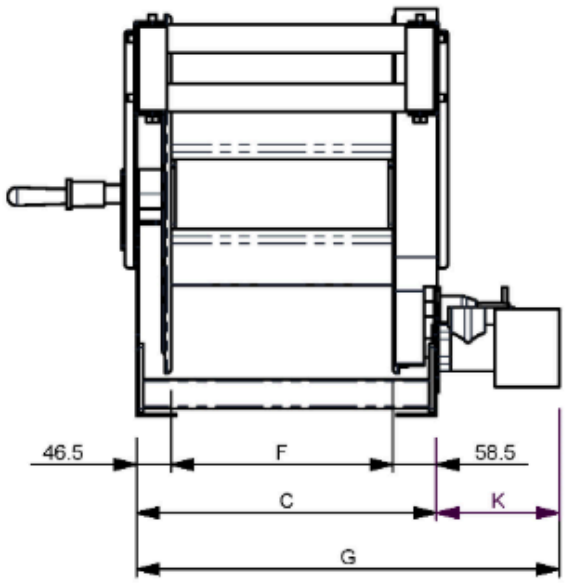

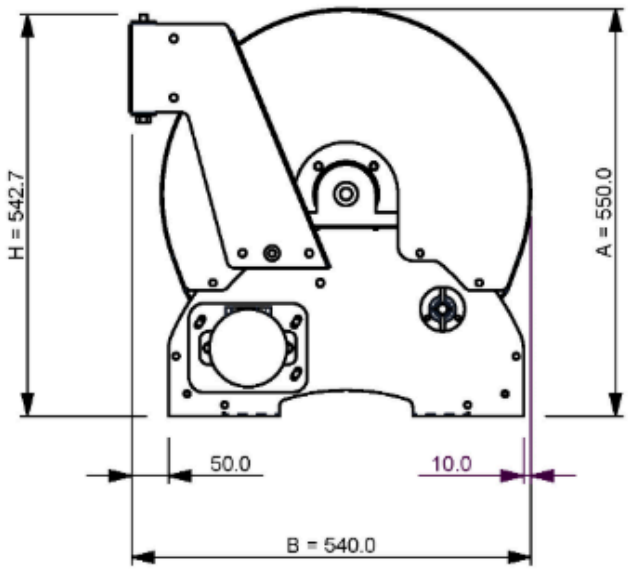

550mm	DIM 'A'
540mm	DIM 'B'
F + 105mm	DIM 'C'
220mm	DIM 'D'
C - 67.2mm	DIM 'E'
150, 300, 450, 600mm	DIM 'F'
C + K	DIM 'G'
543mm	DIM 'H'
ITEM	DIM 'I'
SPRING PIN	100mm
	DIM 'J'
HAND CRANK	150mm
	DIM 'K'
12 & 24 VDC SML	131mm
12 & 24 VDC EXP	199mm
110 & 240 VAC EXP	199mm
4AM AIR DRIVE	115mm
HYDRAULIC DRIVE	115mm

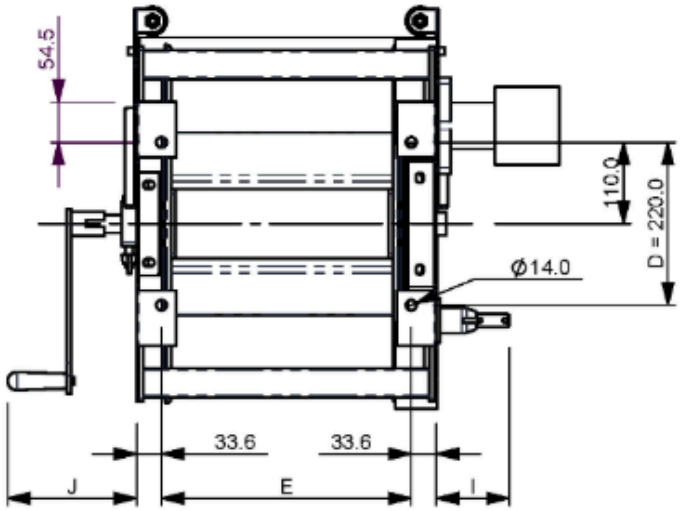

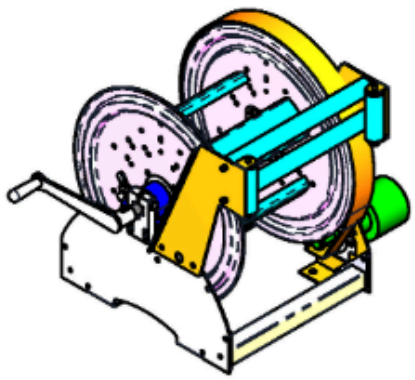

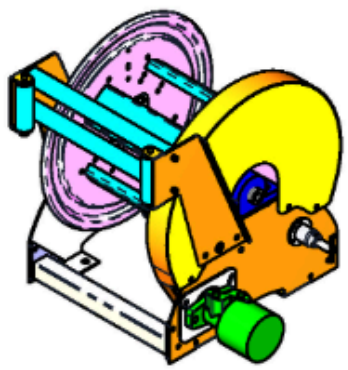

MATERIAL:	**ReCoila**	ISSUED FOR: REFERENCE	APPROVED:
FINISH:	Unit 1/10 Melissa Place Kings Park NSW 2148 Australia WWW.RECOILA.COM	Ph: 61 2 9621 8988 Fx: 61 2 9621 7688 Em: sales@recoila.com	ITEM: **C SERIES - MKII SALES DWG**
SCALE: 1:10 AT A4			DRAWING: ST11093- A . 2 (NUMBER - PART REV . DWG REV)
TOLERANCES: DIMENSIONS 2 DECIMAL PLACES (10.00) ±0,1mm DIMENSIONS 1 DECIMAL PLACE (10.0) ±0,2mm DIMENSIONS 0 DECIMAL PLACES (10.) ±0.5mm			DATE 29/01/2014 — SHEET 1 OF 1

© ALL INTELLECTUAL PROPERTY RIGHTS RESERVED

SW PART: C SERIES - MKII REEL ASSM | SW DWG: ST11093-A.2 C SERIES - MKII REEL SALES ASSM

DO NOT SCALE DWG : IF IN DOUBT ASK